SECO N 24 25

Technical Information and operating instructions

Application

SECO N 24 25

- 24V Dc Chain Motor
- Environmental Ventilation applications
- Range of Strokes (max. 350mm)
- Range of Fixing Systems
- Tailored options available to meet application requirements
- CE Marked
- Please keep these operating instruction for future reference and maintenance. Subject to technical modifications. diagram is not binding

Lancaster House
Wellington Crescent
Fradley Park, Lichfield
Staffordshire WS13 8RZ

+44 (0)1543 443060
sales@secontrols.com
www.secontrols.com

Name & registered office: Loanguard Limited, Lancaster House, Wellington Crescent, Fradley Park, Lichfield, Staffordshire WS13 8RZ Company No.01468061 Vat No.377 5600 30 - SE Controls is a Registered Trademark

SE CONTROLS

Specification

ACTUATOR	SECO N 24 25
ACTUATOR TYPE	24V dc CHAIN OPENER
DIMENSION	29 X 42 X 488
AMP DRAW CURRENT (no load)	<0.5A
AMP DRAW CURRENT (250N load)	<0.5A
STALL CURRENT	1.0A (for 500mS)
CONSUMPTION (without load)	<12W
CONSUMPTION (with load)	<12W
DB RATING	≤ 4 dB in test chamber condition with background at ≈ 35dB
STROKE	250Mmm, 350mm other strokes are available*
OPERATING SPEED	5mm/sec standard 3 and 7mm/sec also available*
AMBIENT OPERATING TEMP.	-5°C +60°C
THRUST FORCE	250N
CLOSE FORCE	250N
SOFT CLOSE	YES (via adjustable zero setting tool)
SEAL RELIEF	Programmable up to 20mm*
CLAMPING FORCE	4000N
SWITCHING	Built in limit switch
TYPE OF SWITCH	Integrated electronic power cut-off
STANDARD FINISH	Powder coated Grey (RAL 9006)
COLOUR OPTION	Other RAL colours available on request
FLEX LENGTH	2m
FLEX TYPE	2 core PVC 4 core (volt free contact)
PROTECTION DEGREE	IP20
WEIGHT	1.5KG
PRODUCT LIFE	15,000 STROKES
FACE FIX	YES
THROUGH BODY FIX	YES
PIVOT BRACKET	YES (specify)
OPEN IN	YES (specify)
USAGE	ENVIRONMENTAL VENTILATION

* non standard options available

1.1 General Safety Information

SE Controls reserves the right to introduce any modifications and improvements to the contents of this publication without the obligation of giving prior notice.

Read and observe the information contained in these safety instructions and respect the order of procedure stated therein.

Please keep these safety instructions for future reference and maintenance. Reliable operation and the prevention of damage and risks are only granted if the equipment is assembled carefully and the settings are carried out according to these instructions and to the operating instructions of the drives.

Please observe the exact terminal assignment, the minimum and maximum power ratings (see technical data) and the installation instructions.

Please observe the following warning symbols

Warning!
Carefully read these warnings

Warning!
Draws attention to instructions that must be followed in order to prevent damage to the actuator.

Notice
Indicates important notices to which attention must be paid.

Danger!
General danger or precautionary warning with numerous implications

Danger!
Danger that could cause personal injury
Danger!
Danger of hands been crushed!

Danger of electric shock

1.2 Health and Safety

Personal Protective Equipment; It is recommended that suitable PPE is worn at all times during the installation and connection of actuator products in accordance with a recommended safe system of work.

Handling and storage; Care must be taken in transportation to the installation location and during fitting. Actuator products must not be dropped, impacted, allowed to get wet or abused in any other way. Mishandling can result in serious damage.

Competence; Installation and connection must only be carried out by authorised, competent and safety conscious persons.

1.3 Environmental

All actuator products contain metallic, plastic and electronic parts. Redundant electronic products are classified as hazardous waste under the WEEE regulations (Waste Electrical and Electronic Equipment). Electronic parts must be disposed by an authorised and licensed recycler.

They must not be disposed of in 'general waste' skips.

Consult SE Controls for assistance.

1.4 Application and Use

When using the actuator, follow these safety instructions described herein. This equipment is designed for the automatic opening and closing of the stated types of windows.

For further application, please contact SE Controls.

The actuator compiles with current safety directives.

Operating safety can be guaranteed only if installers comply with the safety regulations in force in the country where the actuator is used.

Do not install two or more actuators on the same window without using a synchronisation accessory.

Any other application of the actuator must be approved after technical testing of the application.Use only original accessories or accessories approved by SE Controls to install the actuator.

The actuator is not a structural member of the window. Always mount the safety arms in bottom-hung applications. The position of the three-way switch button must be outside the field of action of the moving part of the window.

Do not allow children to play with the fixed or remote controls.

When opening or closing the window, make sure other people are far away from the moving part, even when a fire detection system is closing an open window.

It would be beyond the scope of these safety instructions to list all the valid regulations and guidelines.

Always make sure that your system corresponds to the valid regulations. Pay particular attention to: the aperture cross-section of the window, the opening time and opening speed, the temperature resistance of the cables and equipment, cross-sections of the cables in relation to the cable lengths and power consumption.

Care must be taken to ensure that actuator products are controlled with compatible products; refer to SE Controls. No liability will be accepted and no guarantee nor service is granted if actuator controls are used without such compatibility being confirmed.

1.5 Installation

Warning! Incorrect installation may render the actuator dangerous! Follow all the instructions set out below and the instructions applied to the motor.

Installation of this equipment must only be carried out by authorised, competent and safety conscious persons.

The actuator must be assembled and connected only by specialised staff who have been properly trained and who are familiar with the problems associated with automatic window opening and closing systems, technical reference standards and safety standards.

The window closes automatically. When opening and closing, the drive unit is stopped by the power cut-off. The corresponding pressure force is listed in the technical data.

Take care - the pressure force is high enough to cause injury!

During assembly and operation do not obstruct the window opening!
Danger of crushing/trapping!

Routing of cables and electrical connections only to be done by a qualified electrician.

Power supply leads 230 V AC to be fused separately by the customer. Keep power supply leads sheathed until the mains terminal.

All low voltage cables (24 V DC) to be installed separately from high voltage cables. Flexible cables should not be plastered in. Provide strain relief for freely suspended cables.

The cables must be installed in such a way that they cannot be severed off, twisted or bent off during operation.

Junction boxes must be accessible for maintenance work.

Adhere to the type of cables, cable lengths and cross-sections as stated in the technical information.

After installation and any changes to the system check all functions by a trial run.

1.6 Maintenance

Always disconnect the motor's supply voltage and batteries during cleaning or maintenance operations, especially if the actuator is equipped with an automatic control device.

The system must be protected against unintentional re-starting.

All smoke ventilation systems must be periodically (annually) checked, serviced, maintained and, if necessary, repaired and re tested by a authorised, trained and competent, safety conscious persons.

Maintenance shall be carried out in accordance with the requirements of;

- Building regulations 2002
- Health and Safety at Work Act 1974
- I.E.E Regulations
- Regulatory Reform (Fire Safety) Order 2005

In order to keep the equipment in optimum operating condition it is recommended that ventilation systems are similarly maintained.

There are no user repairable parts in this equipment.

Basic checks that can be carried out include;

- At least once a year, check that the power cable and connection has not been damaged and that it shows no sign of wear
- Check that no object obstructs the window movement.
- If faults arise, never work on the actuator and never open or dismantle parts of the actuator that deny access to the inside of the mechanism.
- If the actuator fails to function or is damaged, contact SE Controls.
- Do not use the actuator until it has been repaired.

A suitable service contract with SE Controls is recommended for this purpose.

The gear system is greased for life and is maintenance free.

Defective equipment must only be repaired by SE Controls. Only original spare parts are to be used.

After maintenance, repair or any changes to the system check all functions by a trial run.

A

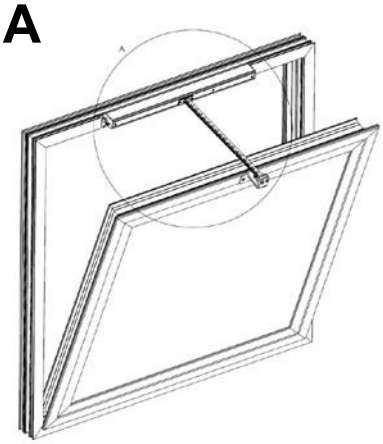

A: Bottom hung inward opening

B

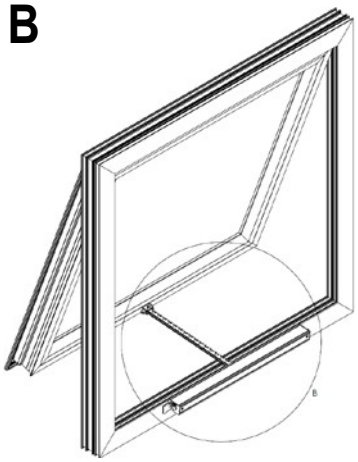

B: Top hung outward opening

C

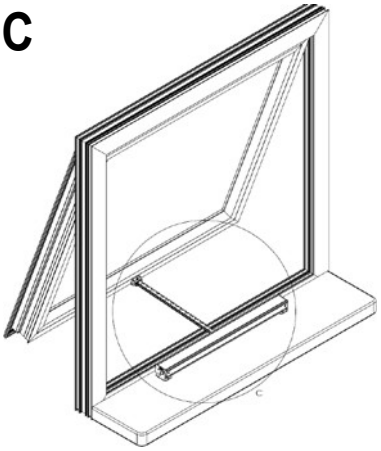

C: Top hung outward opening

D

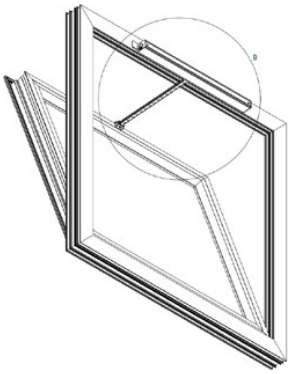

D: Bottom hung outward opening

1. Body of chain actuator

2. Trunnion set (installed in the moving part of the window)

3. Sill fixing option

4. Face fixing option

5. Through body fixing option

1

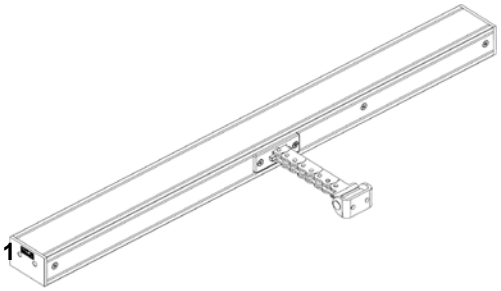

2

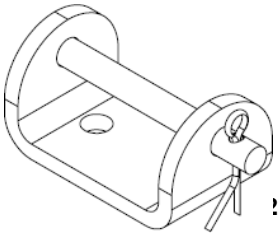

5

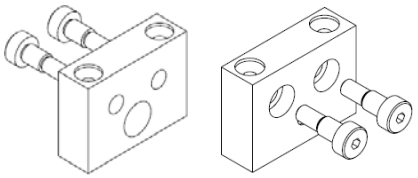

DOUBLE BOLT FIX FOR NO PIVOT

3

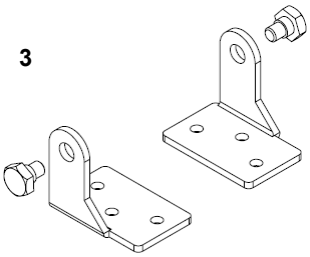

4

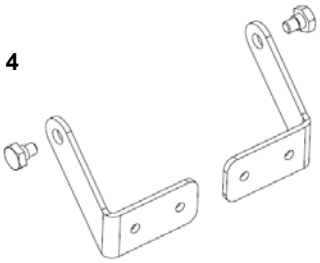

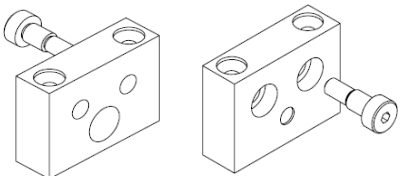

SINGLE BOLT FIX FOR PIVOT

A: Bottom hung window installation

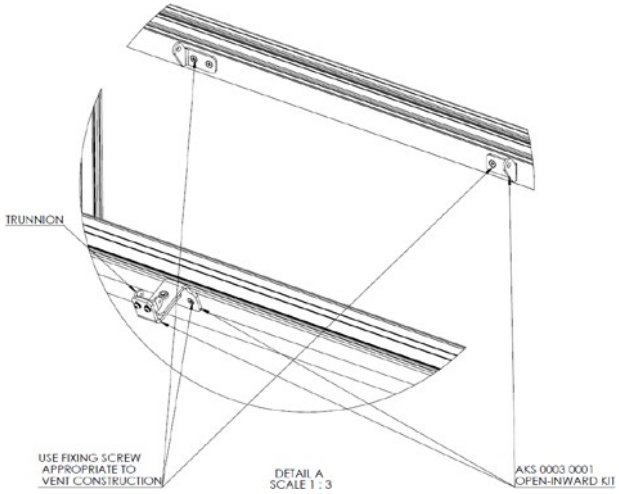

The installation process is similar to the above (Top hung window installation)

Caution: Safety arms chains are recommended to connect to the frame for moving part of the window if bottom hung widows are installed.

B: Top hung window installation

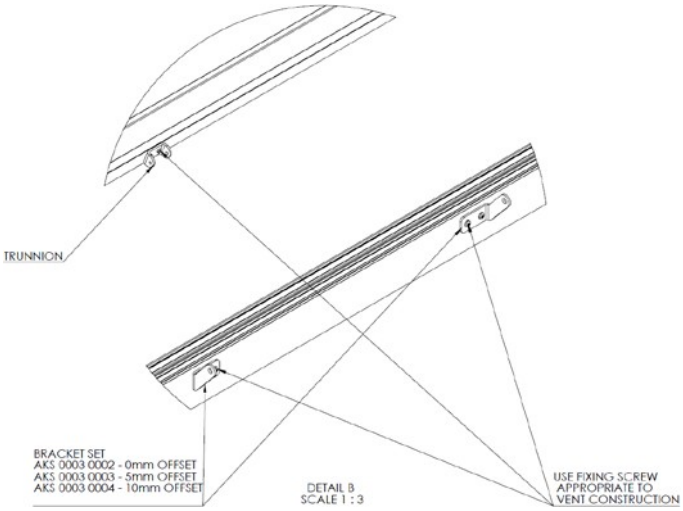

i. Fix the trunnion set(2) in the mid position on the moving part of the window using the holding bracket (4) provided.

ii. Close the window, then fix the chain actuator body(1) with the pivot bracket set(3) provided. It should be aligned with the trunnion set(2) on the moving part of the window. Caution: misalignment will cause improper opening and closing of the window.

iii. Fix all screws in the trunnion set(2) and pivot bracket(3) firmly. (Make sure sufficient space is allowed for the actuator body to rotate)

iv. Fix the pin to connect the trunnion set(2) to the top part of the chain.

v. Switch on the power supply to test run the actuator for a few cycles, make sure the opening and closing of the window is smooth and free from obstruction.

vi. Repeat the above if adjustment is required.

C: Top hung window installation

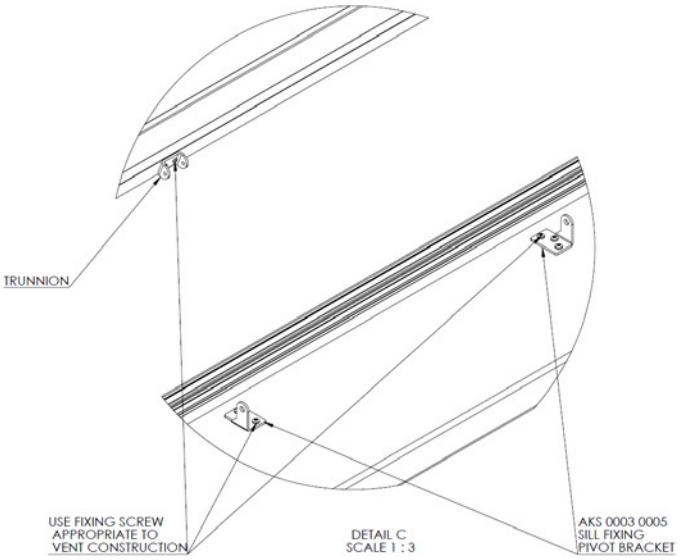

i. Fix the trunnion set(2) in the mid position on the moving part of the window.

ii. Close the window, then fix the chain actuator body(1) with the pivot bracket set(3) provided. It should be aligned with the trunnion set(2) on the moving part of the window. Caution: misalignment will cause improper opening and closing of the window.

iii. Fix all screws in the trunnion set(2) and pivot bracket(3) firmly. (make sure sufficient space is allowed for the actuator body to rotate)

iv. Fix the pin to connect the trunnion set(2) to the top part of the chain.

v. Switch on the power supply to test run the actuator for a few cycles, make sure the opening and closing of the window is smooth and free from obstruction

Setting the zero position of the actuator (For optimum performance ensure zero point is correctly set)

i Fit motor to vent as normal, run motor open and then commence close of motor.

ii Position Zero Set Tool (ZST) as shown whilst motor is running (twin will have two ZSTs).

iii Still holding ZST in place, allow vent to continue close stroke until it stops on current limit. MAKE SURE YOU DO NOT TRAP YOUR FINGERS.

iv New zero point is now set. Power and ZST can be removed.

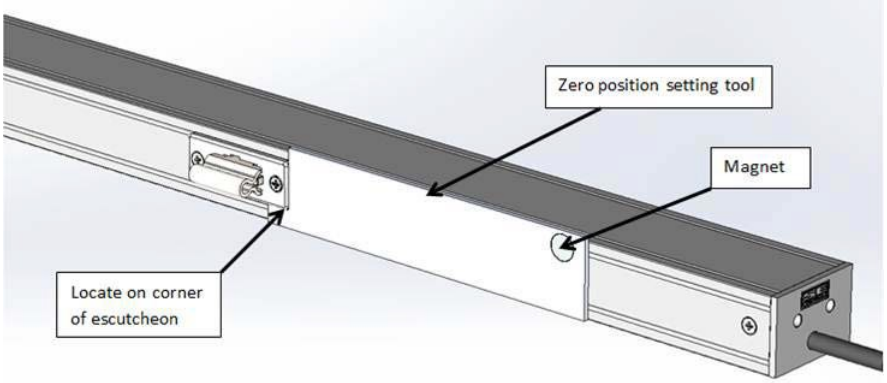

Connection

DC 24 V version (2 wires)

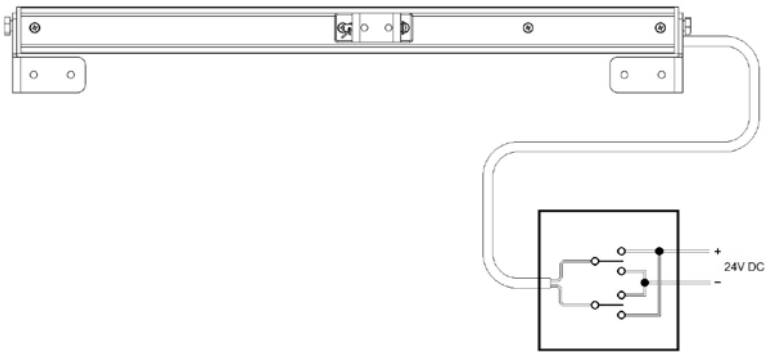

Connection

DC 24 V version for volt free connection (4 wires)

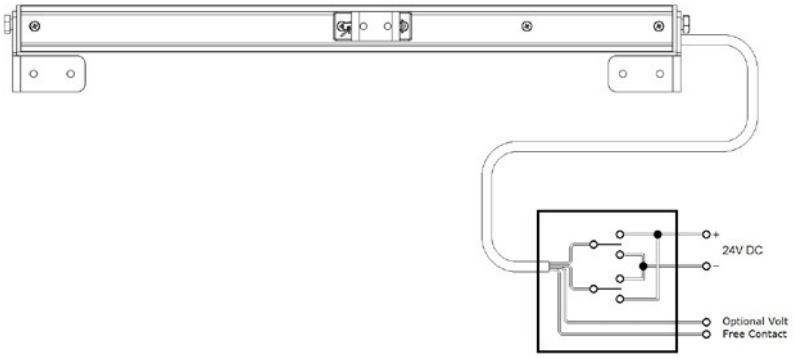

SE Controls

Lancaster House
Wellington Crescent
Fradley Park
Lichfield
Staffs
WS13 8RZ

Tel: 01543 443060
Fax: 01543 443070

Website:
www.secontrols.com
Email:
sales@secontrols.com

SE Controls is a Registered Trademark

Please keep these operating instructions for future reference and maintenance. Subject to technical modifications. Diagrams are not binding.